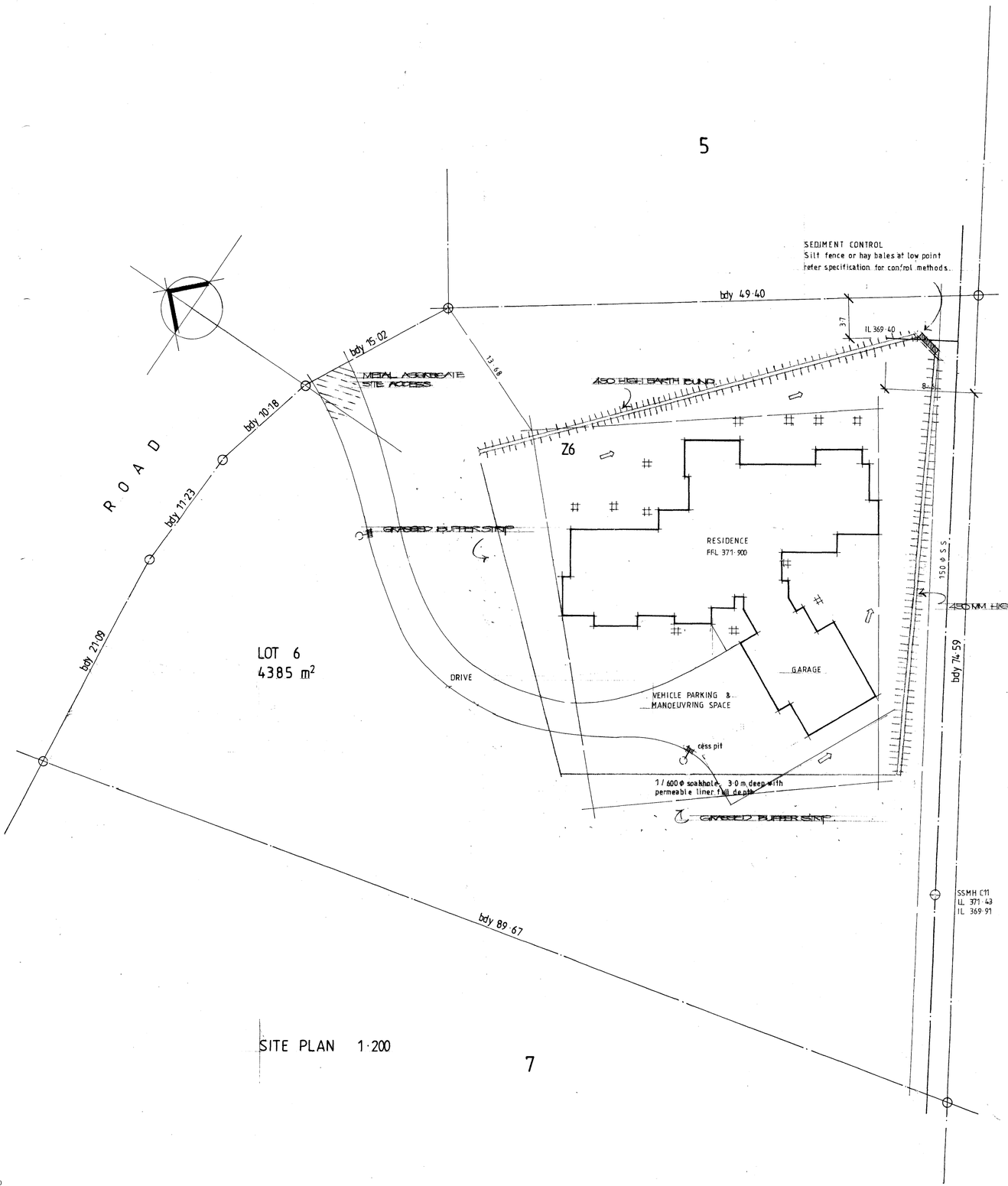


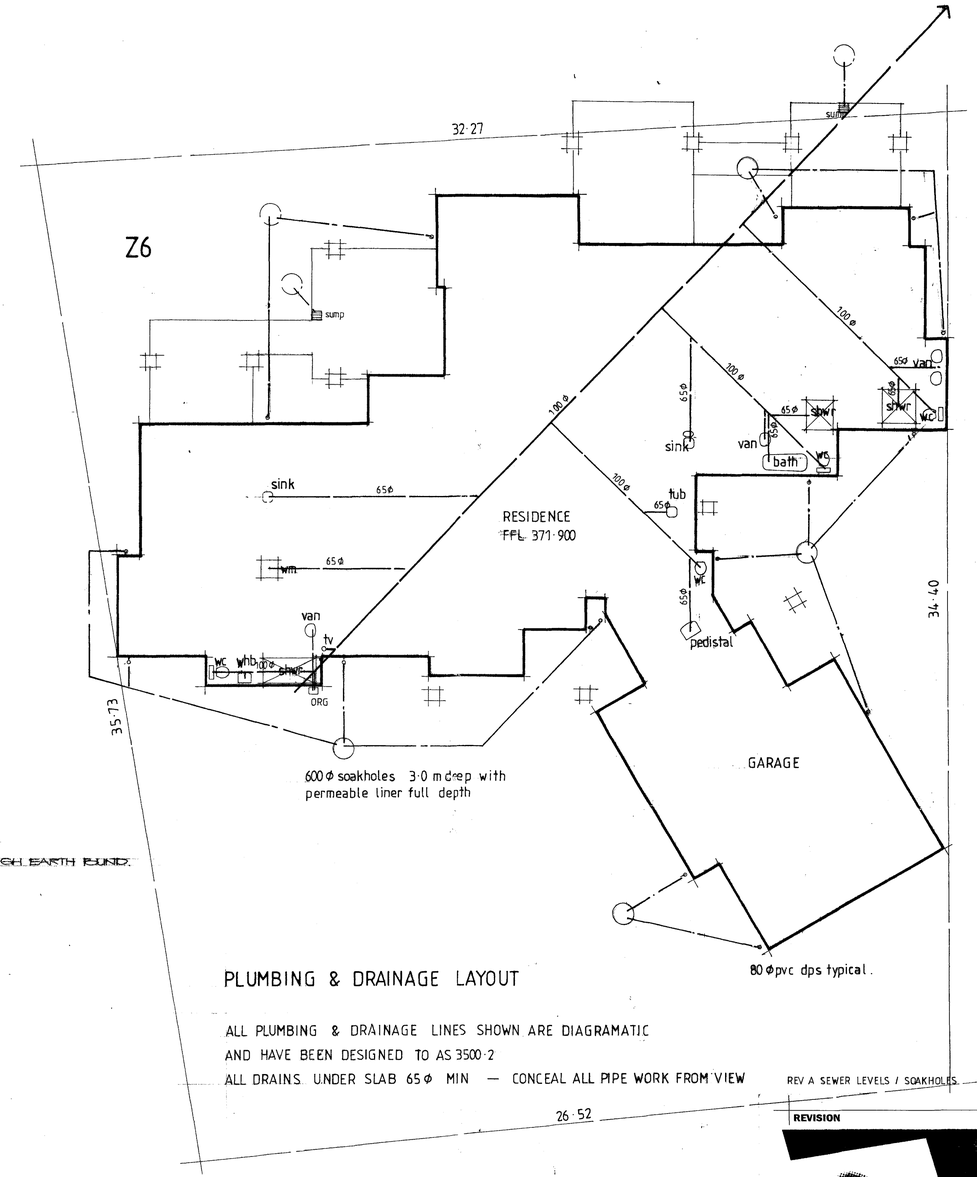


## PLUMBING & DRAINAGE LAYOUT

ALL PLUMBING & DRAINAGE LINES SHOWN ARE DIAGRAMATIC
AND HAVE BEEN DESIGNED TO AS 3500·2
ALL DRAINS UNDER SLAB 65 Φ MIN — CONCEAL ALL PIPE WORK FROM VIEW

REV A SEWER LEVELS / SOAKHOLES

REVISION


IZBA ARCHITECTURE
1 Utuhina Road
Rotorua
phone/fax: (07) 346 3862
mobile: (021) 676 361
house of design


project:
YEOMAN RESIDENCE
LOT 6
PARKLAND ESTATES
PUKEHANGI ROAD

drawing:
SITE PLAN DRAINAGE LAYOUT

37021

BCP

scale: 1·200 1·100

19A
sht rev


Document Set ID: 562620
Version: 1, Version Date: 12/03/2009

W0037021

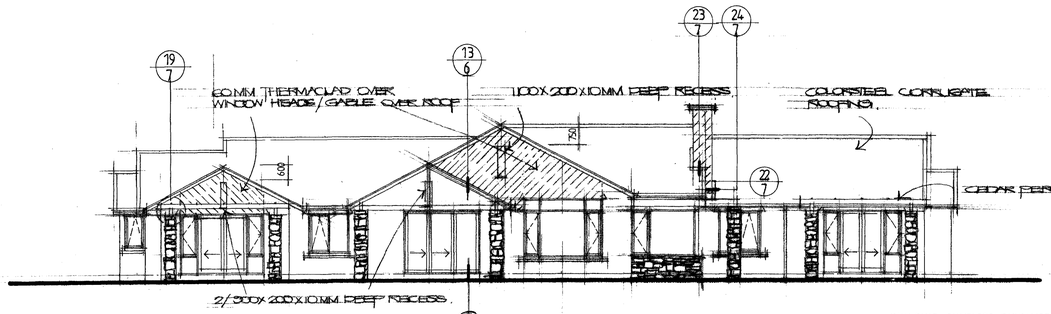


NORTH ELEVATION

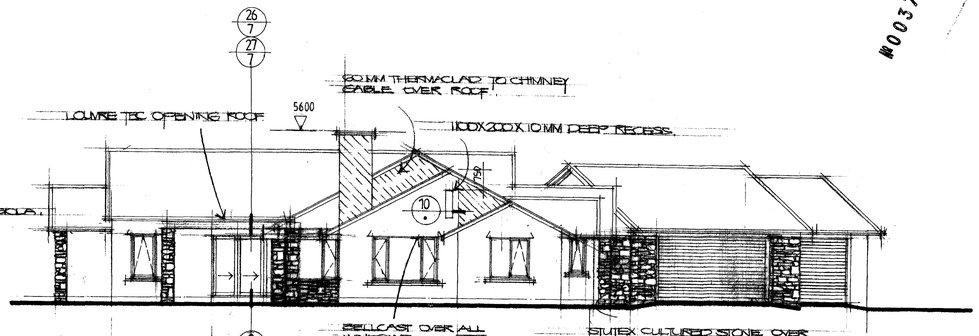


WEST ELEVATION

BUILDING ENVELOPE RISK MATRIX ALL ELEVATIONS

| RISK FACTOR | LOW | MED | HIGH | V HIGH | SUBTOTAL |
|---|---|---|---|---|---|
| | RISK SEVERITY | | | | |
| WIND ZONE | 0 | 0 | 1 | 2 | 1 |
| Nº OF STOREYS | 0 | 1 | 2 | 4 | 0 |
| ROOF WALL | 0 | 1 | 3 | 5 | 1 |
| EAVES WIDTH | 0 | 1 | 2 | 5 | 1 |
| ENVELOPE COMP | 0 | 1 | 3 | 6 | 0 |
| DECK DESIGN | 0 | 2 | 4 | 6 | 0 |
| TOTAL RISK SCORE | | | | | 3 |

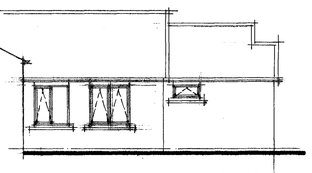

SOUTH ELEVATION PART

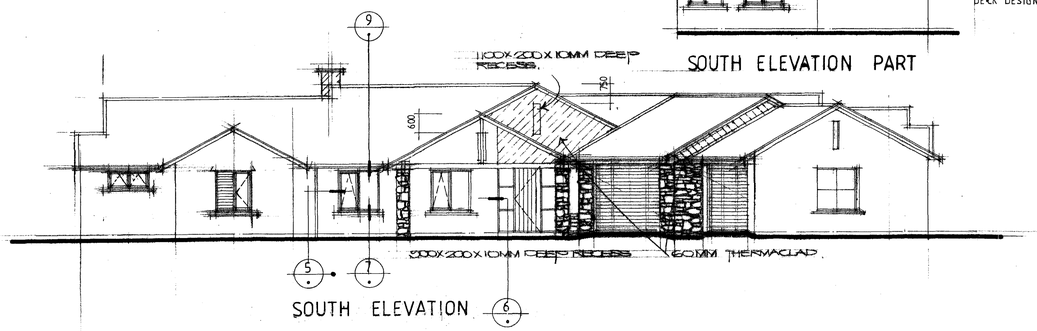


SOUTH ELEVATION

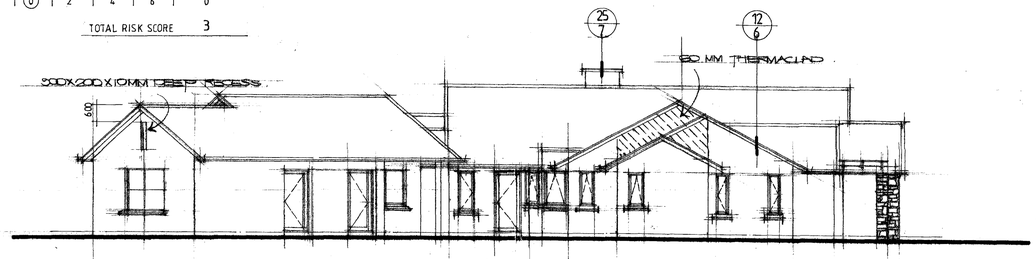


EAST ELEVATION

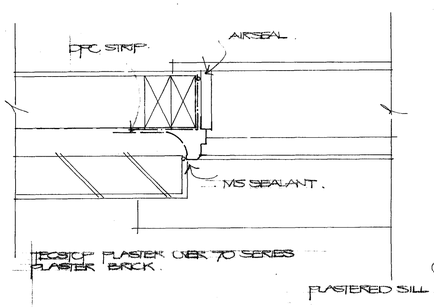


detail 5

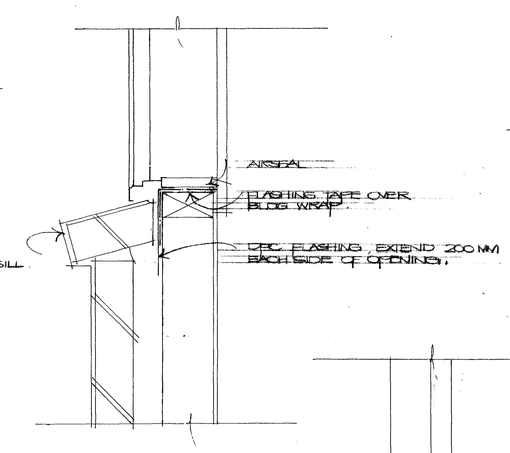


detail 7

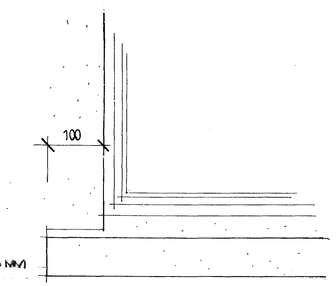


ELEVATION WINDOW SILL

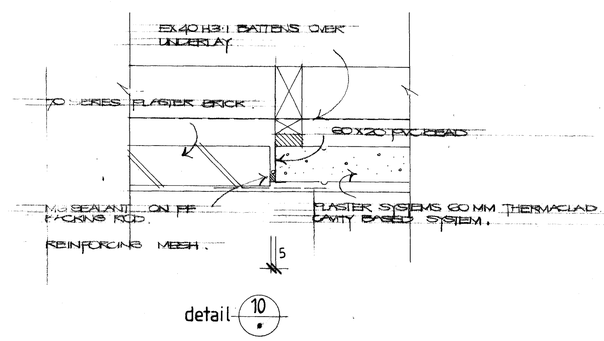


detail 10

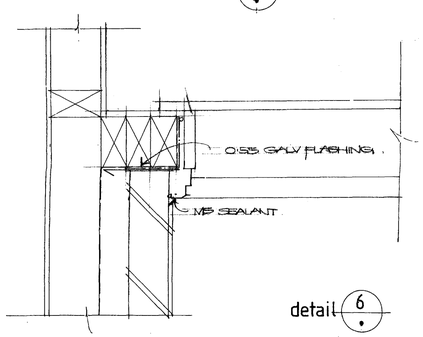


detail 6

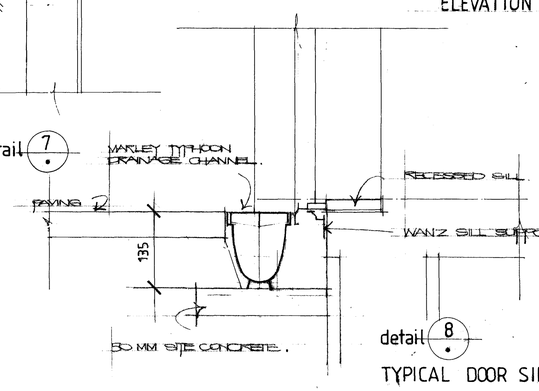


detail 8

TYPICAL DOOR SILL

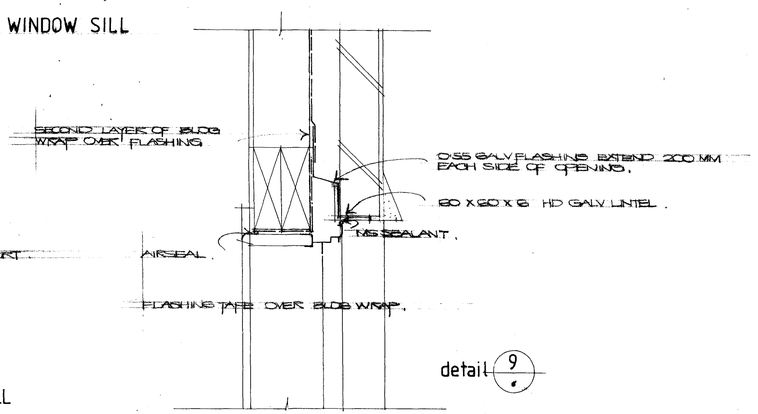


detail 9

REVA RISK MATRIX

REVISION


IZBA ARCHITECTURE
house of design
1 Utuhina Road
Rotorua
phone/fax: (07) 346 3862
mobile: (021) 676 361


project:
YEOMAN RESIDENCE
LOT 6
PARKLAND ESTATES
PUKEHANGI ROAD

drawing:
ELEVATIONS DETAILS

scale: 1:100 1:5

3A
sht rev


Document Set ID: 562620
Version: 1, Version Date: 12/03/2009

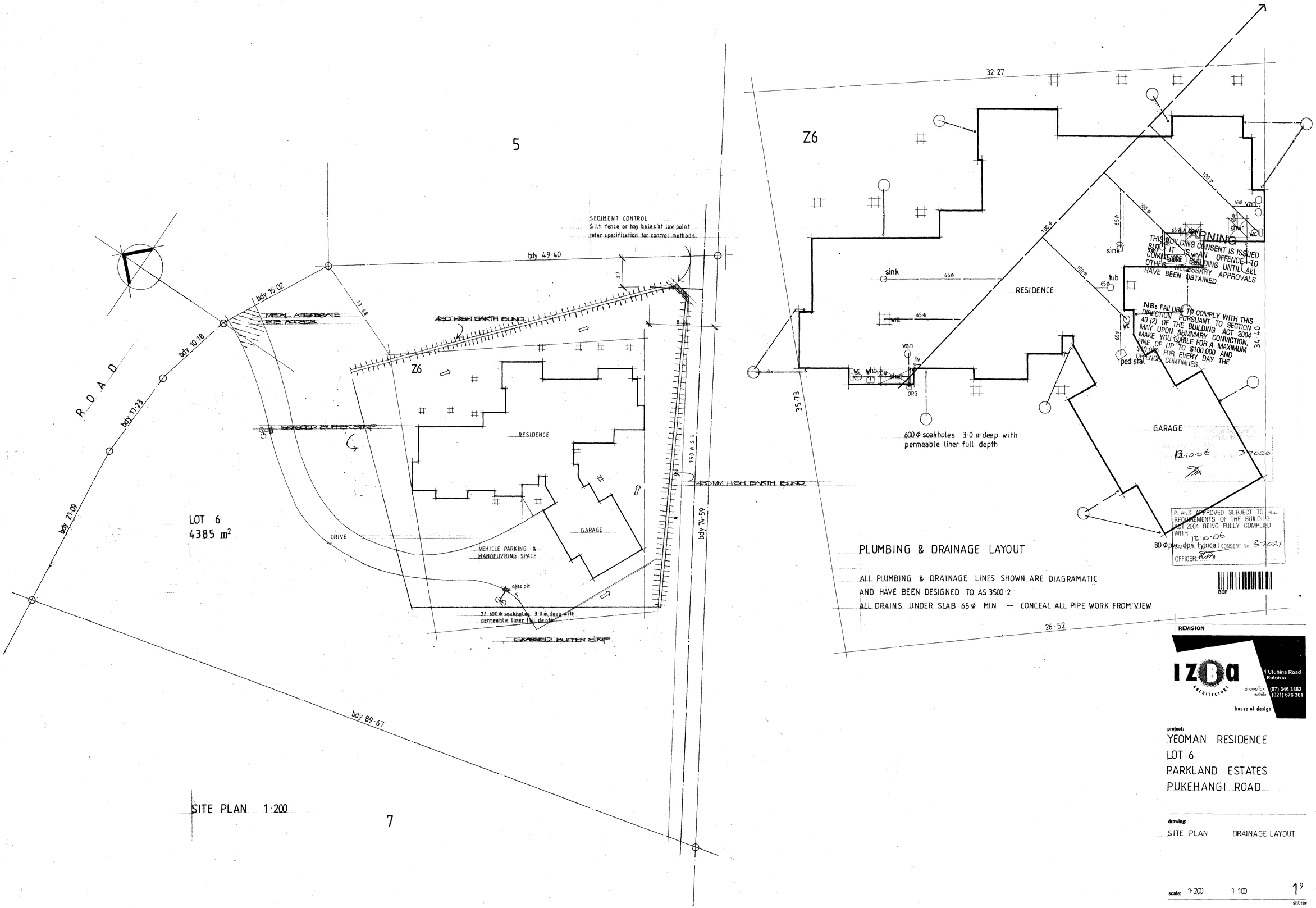


Document Set ID: 562620
Version: 1, Version Date: 12/03/2009

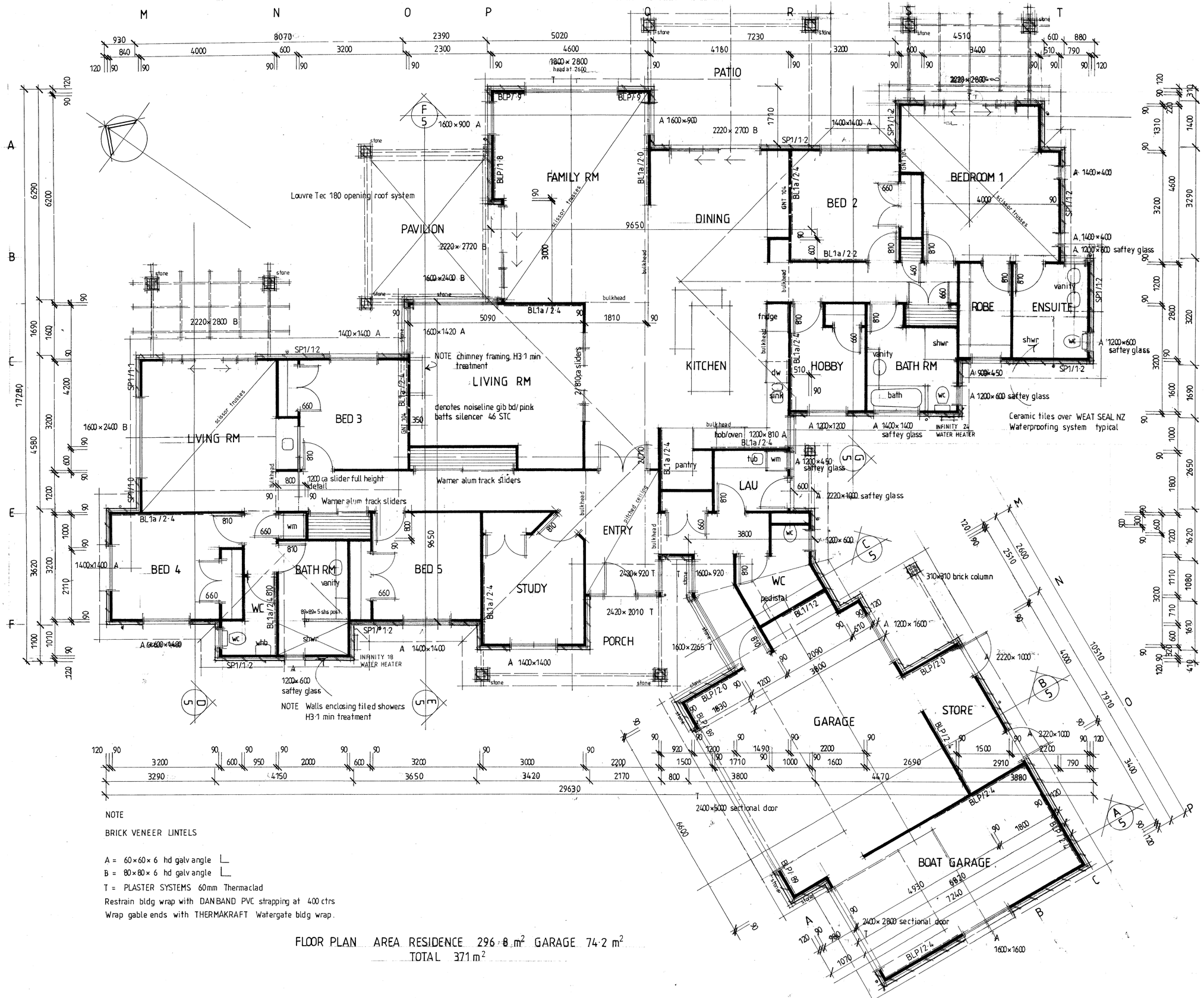


NOTE

BRICK VENEER LINTELS

A = 60×60× 6 hd galv angle ∟
B = 80×80× 6 hd galv angle ∟
T = PLASTER SYSTEMS 60mm Thermaclad
Restrain bldg wrap with DANBAND PVC strapping at 400 ctrs
Wrap gable ends with THERMAKRAFT Watergate bldg wrap.

FLOOR PLAN AREA RESIDENCE 296·8 m² GARAGE 74·2 m²
TOTAL 371 m²

NOTE

ALL WORK TO COMPLY WITH NZS 3604 1999 & NZ BUILDING CODE
WIND ZONE HIGH EQ ZONE A
CORROSION ZONE 4

ALL WALL FRAMING 100×50 H1·2 MSG8
EXTERIOR WALLS AT 400 CTRS
INTERNAL WALLS AT 600 CTRS

ALL TIMBER TREATMENT TO COMPLY WITH NZS 3602: 2003

INSULATION
WALLS R2·2 PINK BATTS INSULATION
CEILINGS R2·6 PINK BATTS INSULATION
FLOOR 75 mm POLYSTYRENE

ALUM JOINERY
ALL FRAMES DOUBLE GLAZED/ CLEAR
EX 25 H3·1 PQ LINERS
60×18 PQ ARCHITRAVES

INTERIOR DOORS
ALL DOOR 2200 HIGH × SIZES NOTED
PLYCO MANHATTEN PQ
60×18 PQ ARCHITRAVES

LININGS
CEILINGS 10 mm GIB-BD
WALLS 10 mm GIB-BD / AQUALINE
TO WET AREAS
PITCHED (15° SCISSOR TRUSSES) TO FAMILY RM, LIVING RM & BEDROOM 1
27·5° TO ENTRY
SQUARE STOPPED THRUOUT
90×18 PQ SKIRTING

REVISION

IZBA ARCHITECTURE
1 Utuhina Road
Rotorua
phone/fax: (07) 346 3862
mobile (021) 676 361
house of design

project:
YEOMAN RESIDENCE
LOT 6
PARKLAND ESTATES
PUKEHANGI ROAD

drawing:
FLOOR PLAN

scale: 1·50

2⁹
sht rev

Document Set ID: 562620
Version: 1, Version Date: 12/03/2009

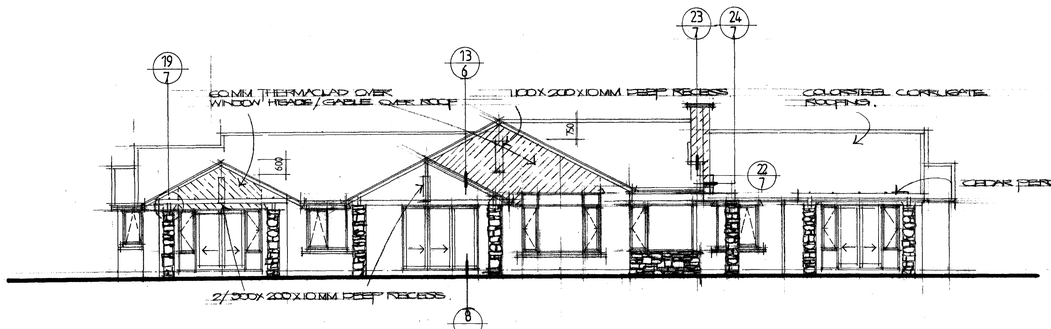


NORTH ELEVATION

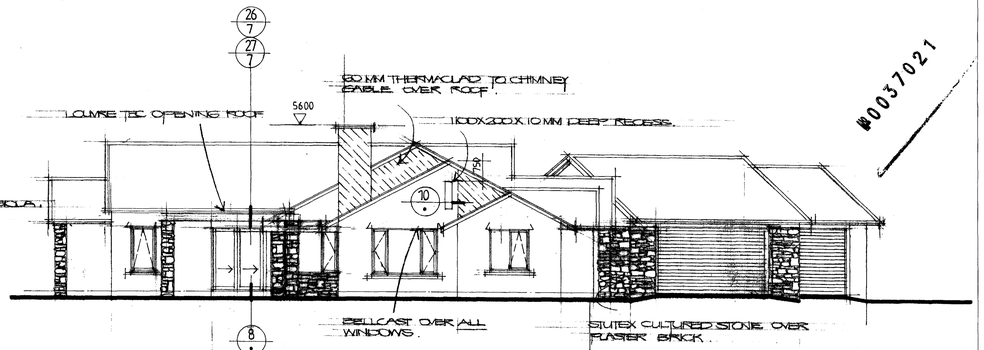


WEST ELEVATION

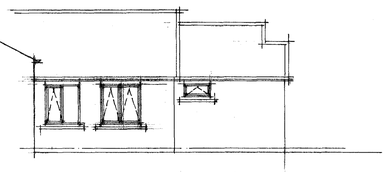

SOUTH ELEVATION PART

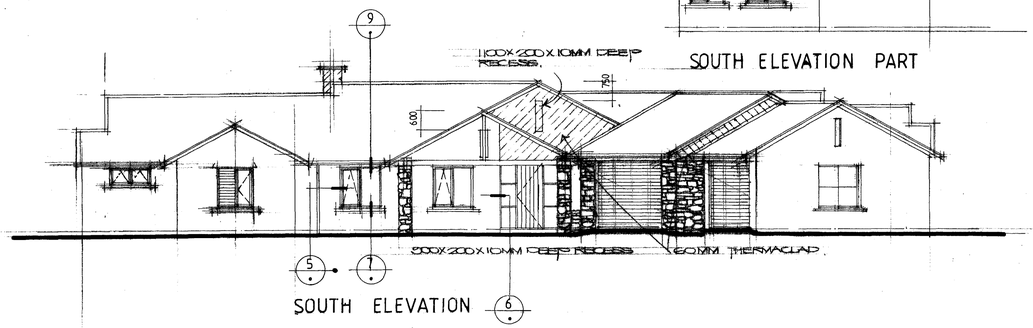


SOUTH ELEVATION

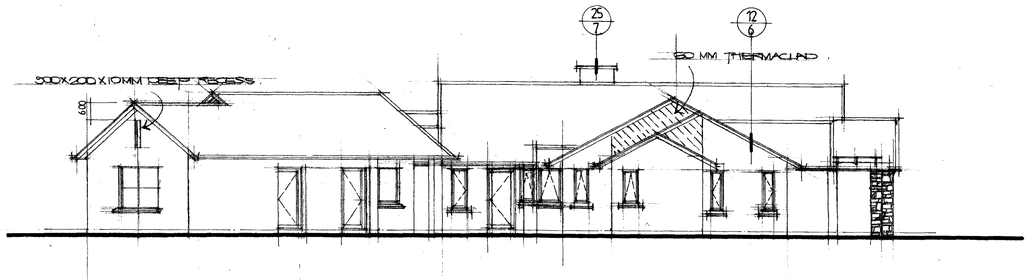


EAST ELEVATION

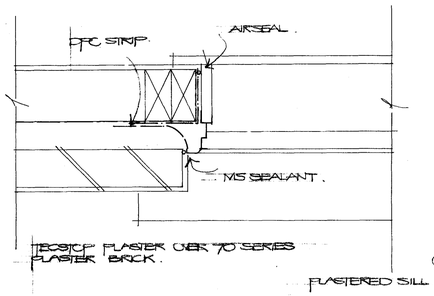


detail 5

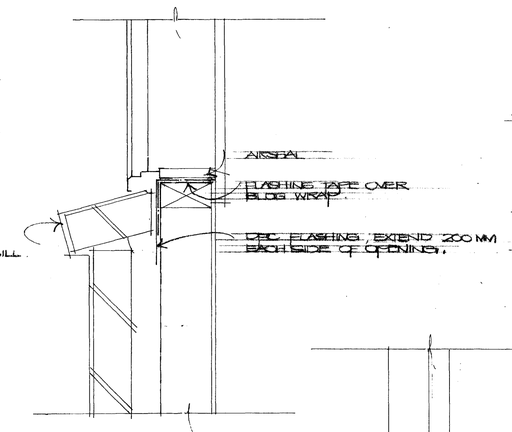


detail 7

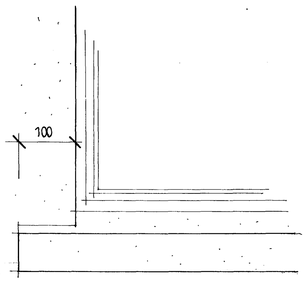


ELEVATION WINDOW SILL

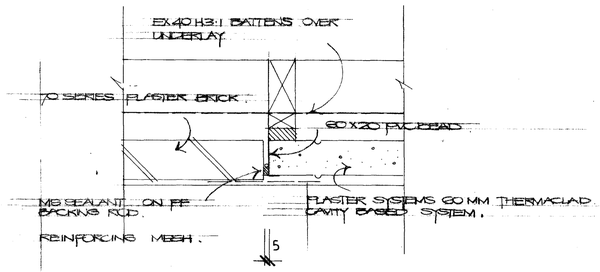


detail 10

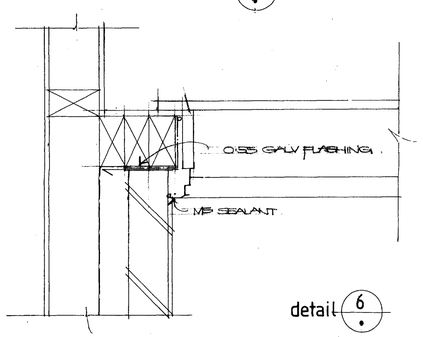


detail 6

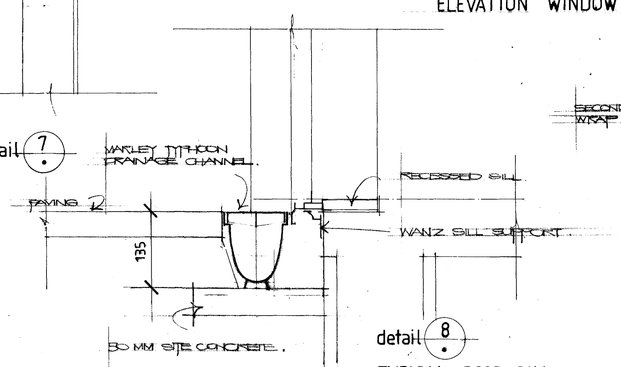


detail 8

TYPICAL DOOR SILL

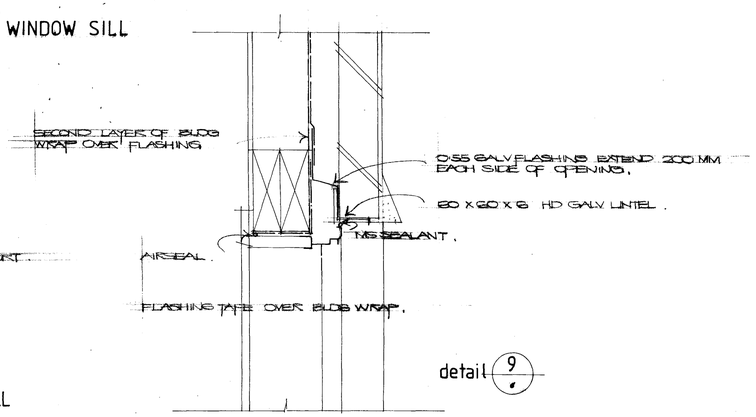


detail 9

REVISION

IZBA ARCHITECTURE
1 Utuhina Road
Rotorua
phone/fax: (07) 346 3862
mobile: (021) 676 361
house of design

project:
YEOMAN RESIDENCE
LOT 6
PARKLAND ESTATES
PUKEHANGI ROAD

drawing:
ELEVATIONS DETAILS

scale: 1:100 1:5

sht rev 3 9

Document Set ID: 562620
Version: 1, Version Date: 12/03/2009

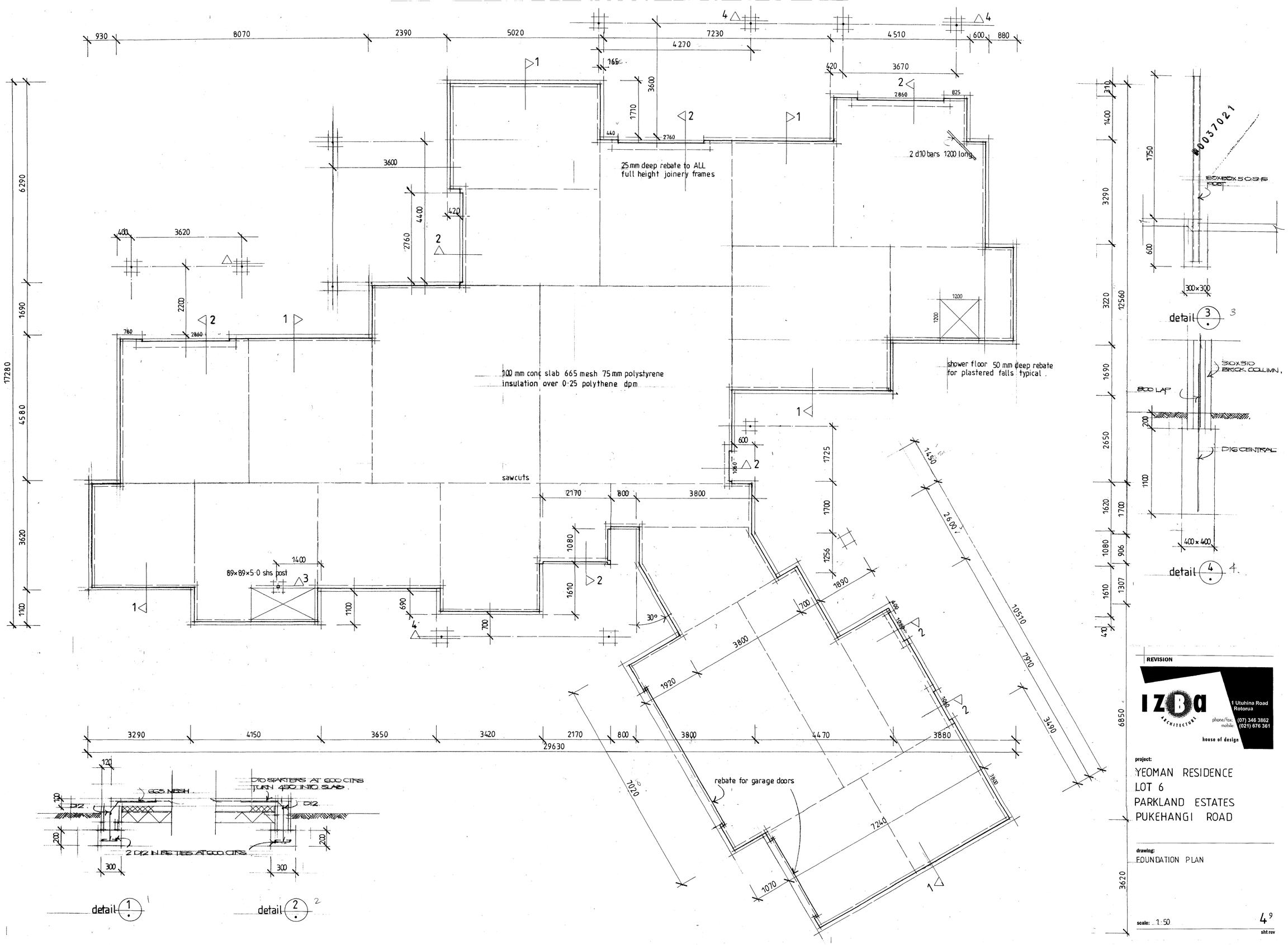


Document Set ID: 562620
Version: 1, Version Date: 12/03/2009

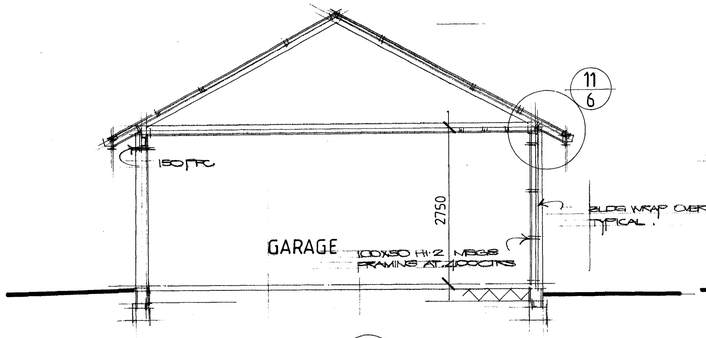


SECTION A 2

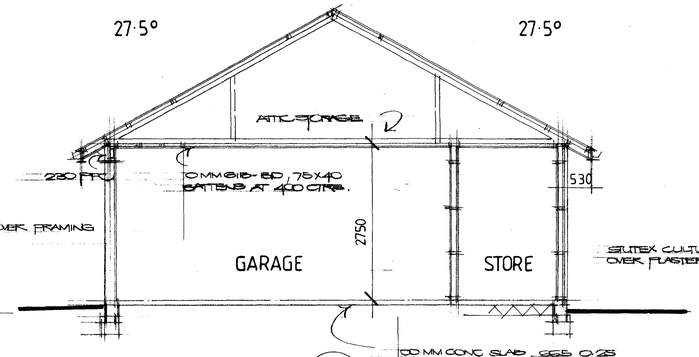


SECTION B 2

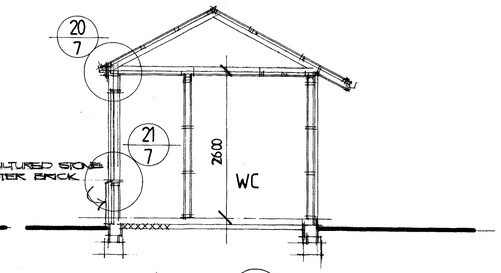


SECTION C 2

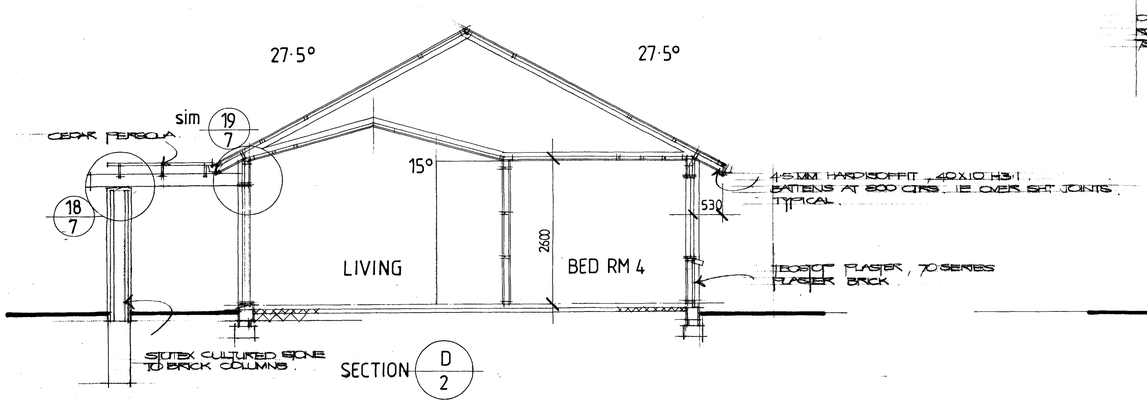


SECTION D 2

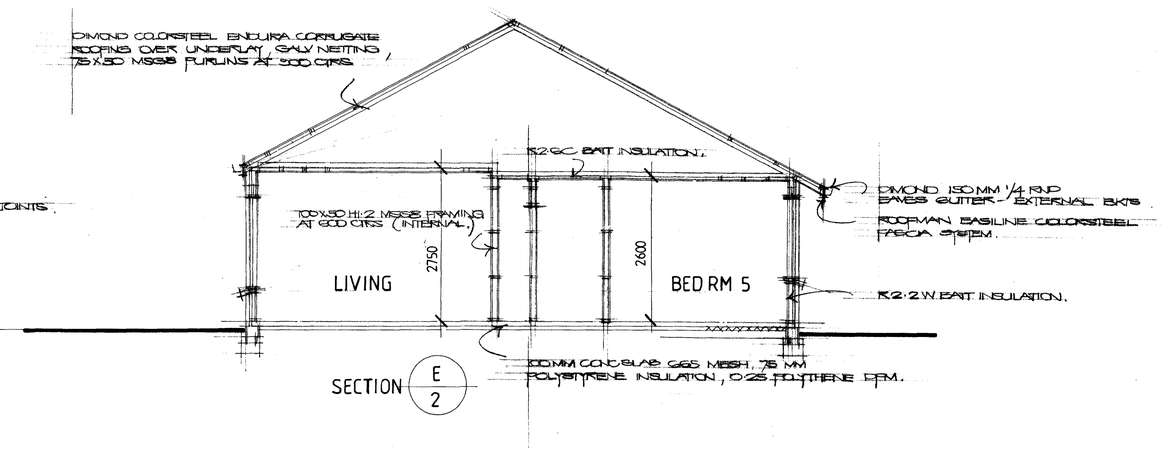


SECTION E 2

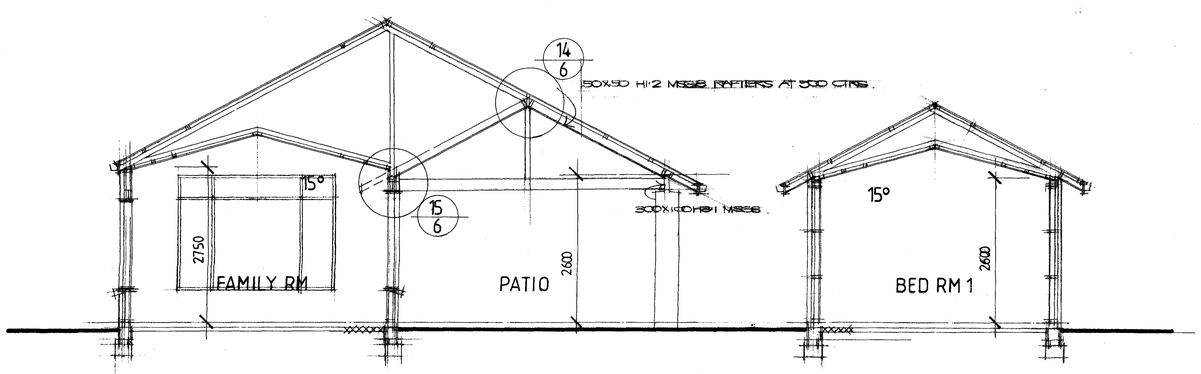


SECTION F 2

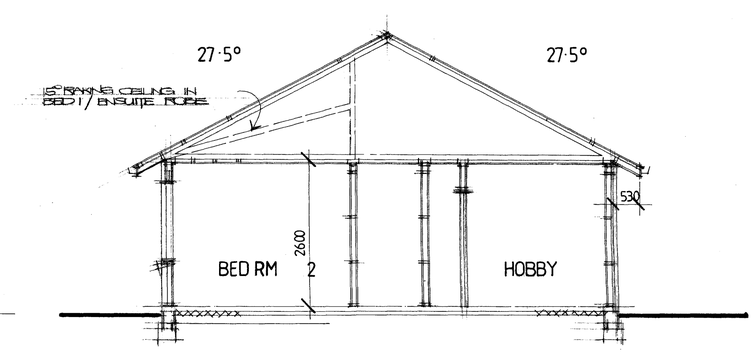


SECTION G 2

REVISION

IZBa ARCHITECTURE

house of design

1 Utuhina Road
Rotorua
phone/fax: (07) 346 3662
mobile: (021) 676 361

project:
YEOMAN RESIDENCE
LOT 6
PARKLAND ESTATES
PUKEHANGI ROAD

drawing:
SECTIONS

scale: 1·50

5 9
sht rev

Document Set ID: 562620
Version: 1, Version Date: 12/03/2009

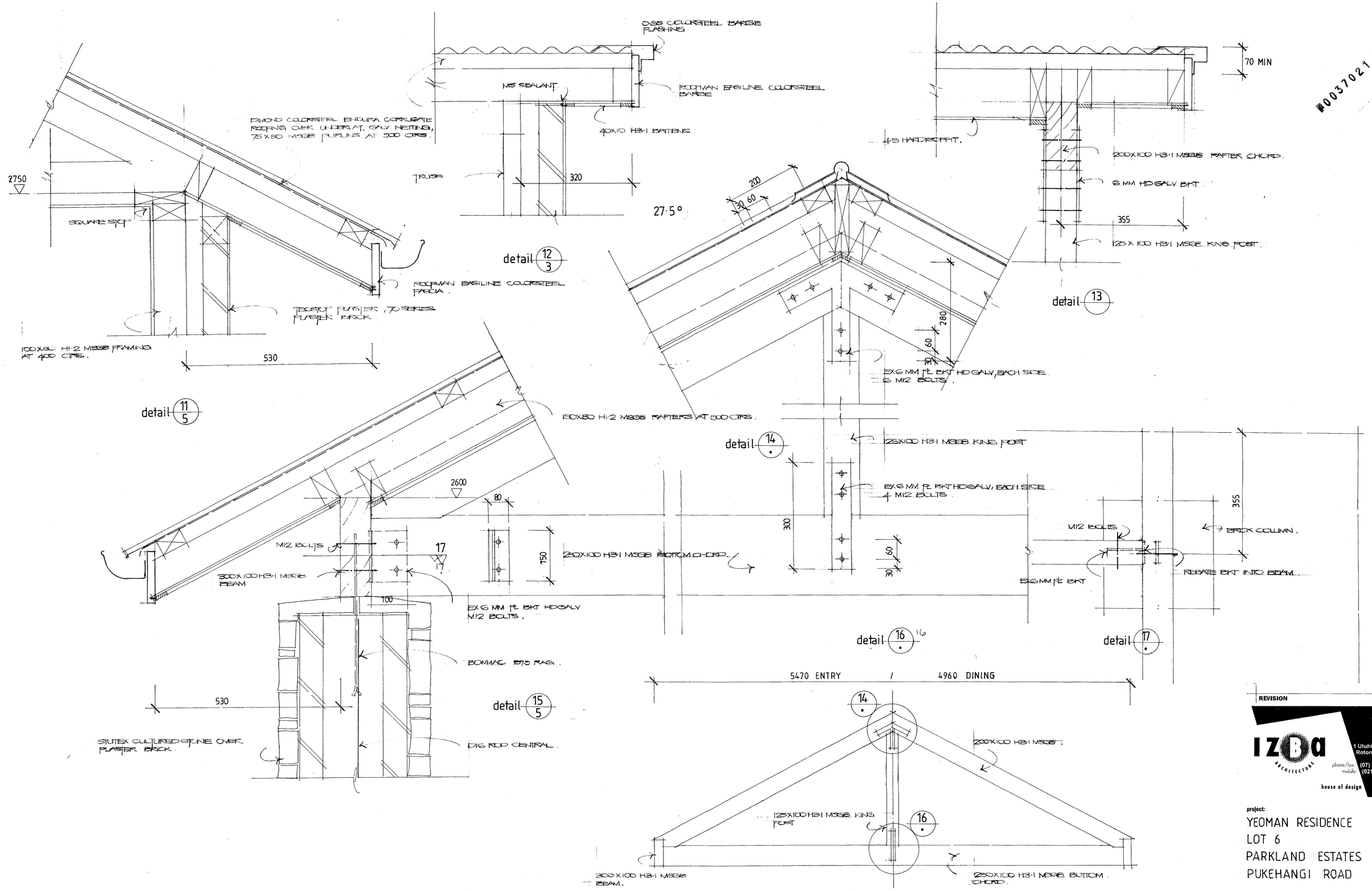


ELEVATION EXPOSED TRUSS

REVISION

IZBA ARCHITECTURE
1 Utuhina Road
Rotorua
phone/fax (07) 346 3862
mobile (021) 676 361
house of design

project:
YEOMAN RESIDENCE
LOT 6
PARKLAND ESTATES
PUKEHANGI ROAD

drawing:
DETAILS

scale: 1:5

6 9
sht rev

Document Set ID: 562620
Version: 1, Version Date: 12/03/2009

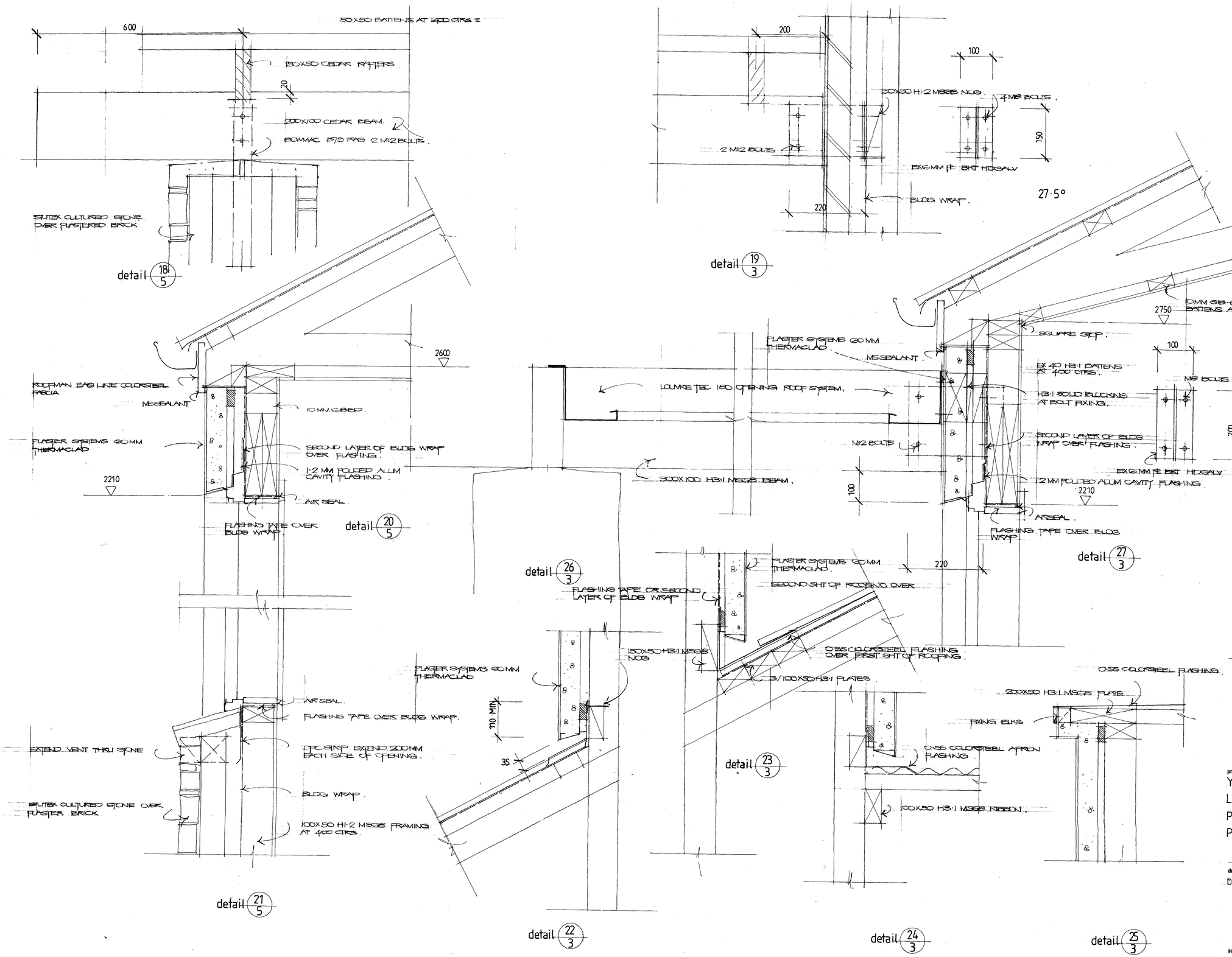


REVISION

IZBA ARCHITECTURE
house of design
1 Utuhina Road
Rotorua
phone/fax (07) 346 3862
mobile (021) 676 361

project:
YEOMAN RESIDENCE
LOT 6
PARKLAND ESTATES
PUKEHANGI ROAD

drawing:
DETAILS

scale: 1:5

7 9
sht rev

Document Set ID: 562620
Version: 1, Version Date: 12/03/2009

NOTE ALL LINTELS / VERANDAH BEAMS MSG8 UNLESS NOTED

M0037021

LINTEL FIXING HIGH WIND ZONE

All lintel spans up to 3·6 m as noted below Fig 8·12 NZS 3604 : 1999

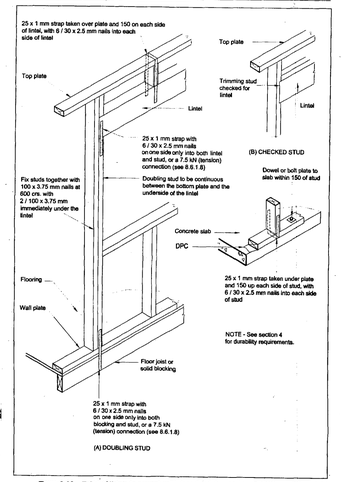


Figure 8.12 – Fixing of lintels to prevent uplift (see 8.6.1.8 and tables 8.14(A) and (B))

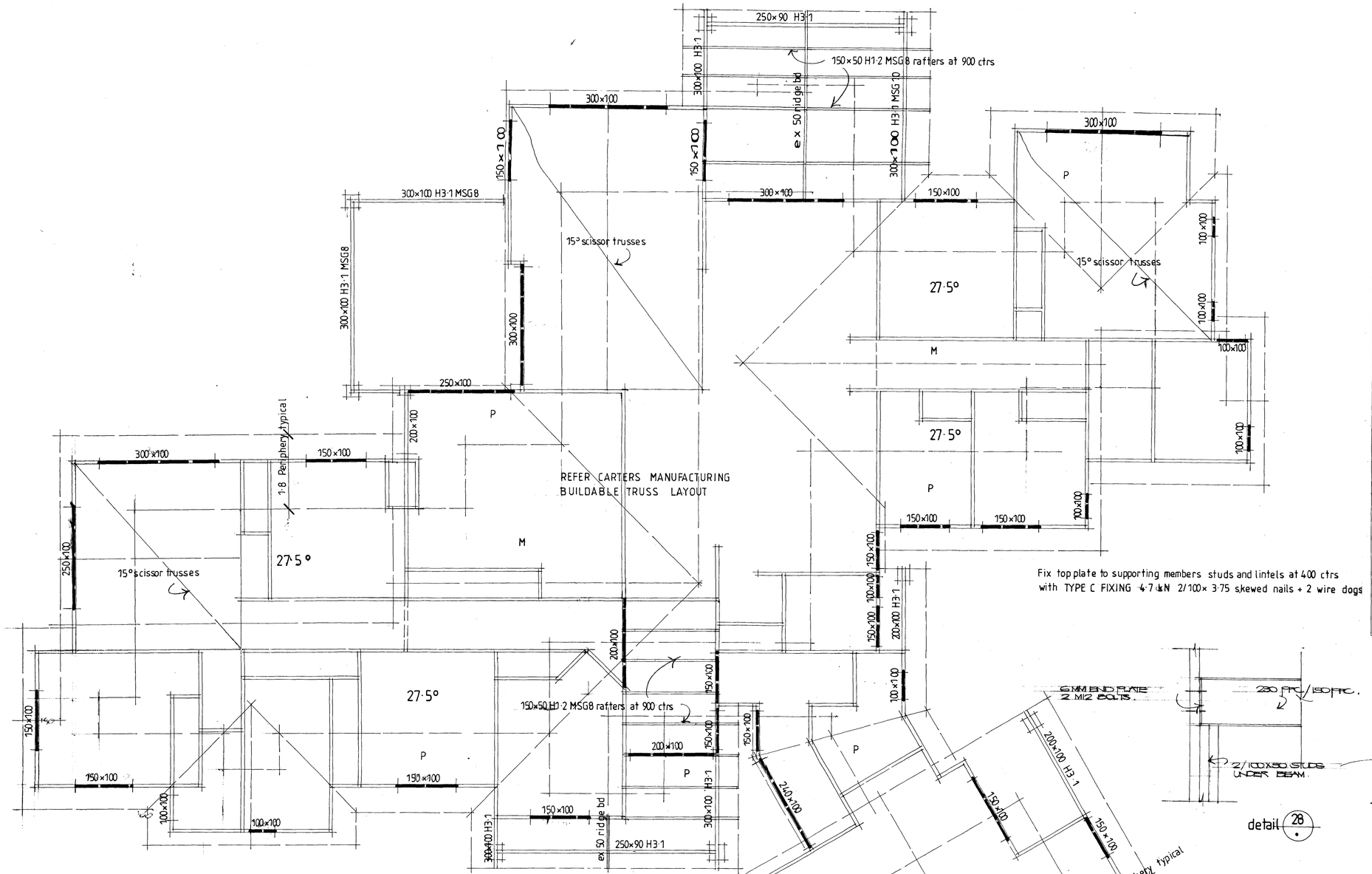


Fix top plate to supporting members studs and lintels at 400 ctrs with TYPE C FIXING 4·7 kN 2/100× 3·75 skewed nails + 2 wire dogs

Fix truss to top plate with TYPE C FIXING 4·7 kN 2/ 100×3·75 skewed nails + 2 wire dogs

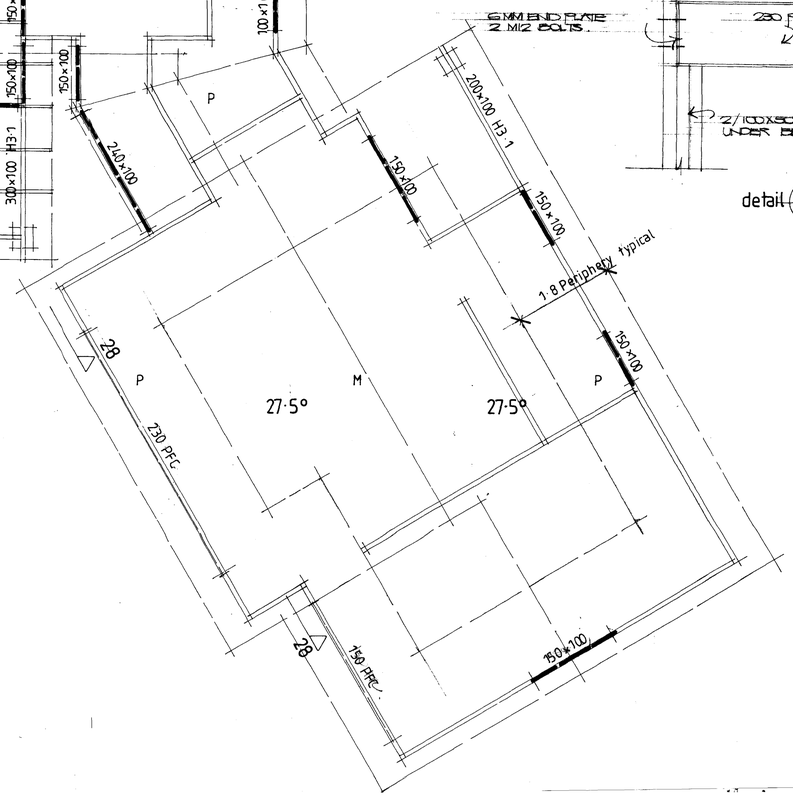


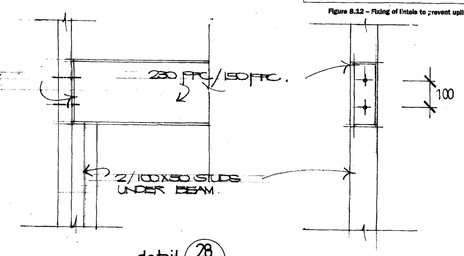


detail 28

PURLIN FIXING HIGH WIND ZONE ( ALL PURLINS 75×50 H1·2 MSG8 )

M = MAIN ROOF 3/100×3·75 skewed nails or 3/ 90 × 3·15 power driven nails 1·1 kN fixing

P = PERIPHERY 2/100×3·75 skewed nails + 1 wire dog 2·7 kN fixing

REVISION

IZBA ARCHITECTURE
house of design
1 Utuhina Road
Rotorua
phone/fax (07) 346 3862
mobile (021) 676 361

project:
YEOMAN RESIDENCE
LOT 6
PARKLAND ESTATES
PUKEHANGI ROAD

drawing:
ROOF FRAMING PLAN

scale: 1:50

8[9]
sht rev

Document Set ID: 562620
Version: 1, Version Date: 12/03/2009

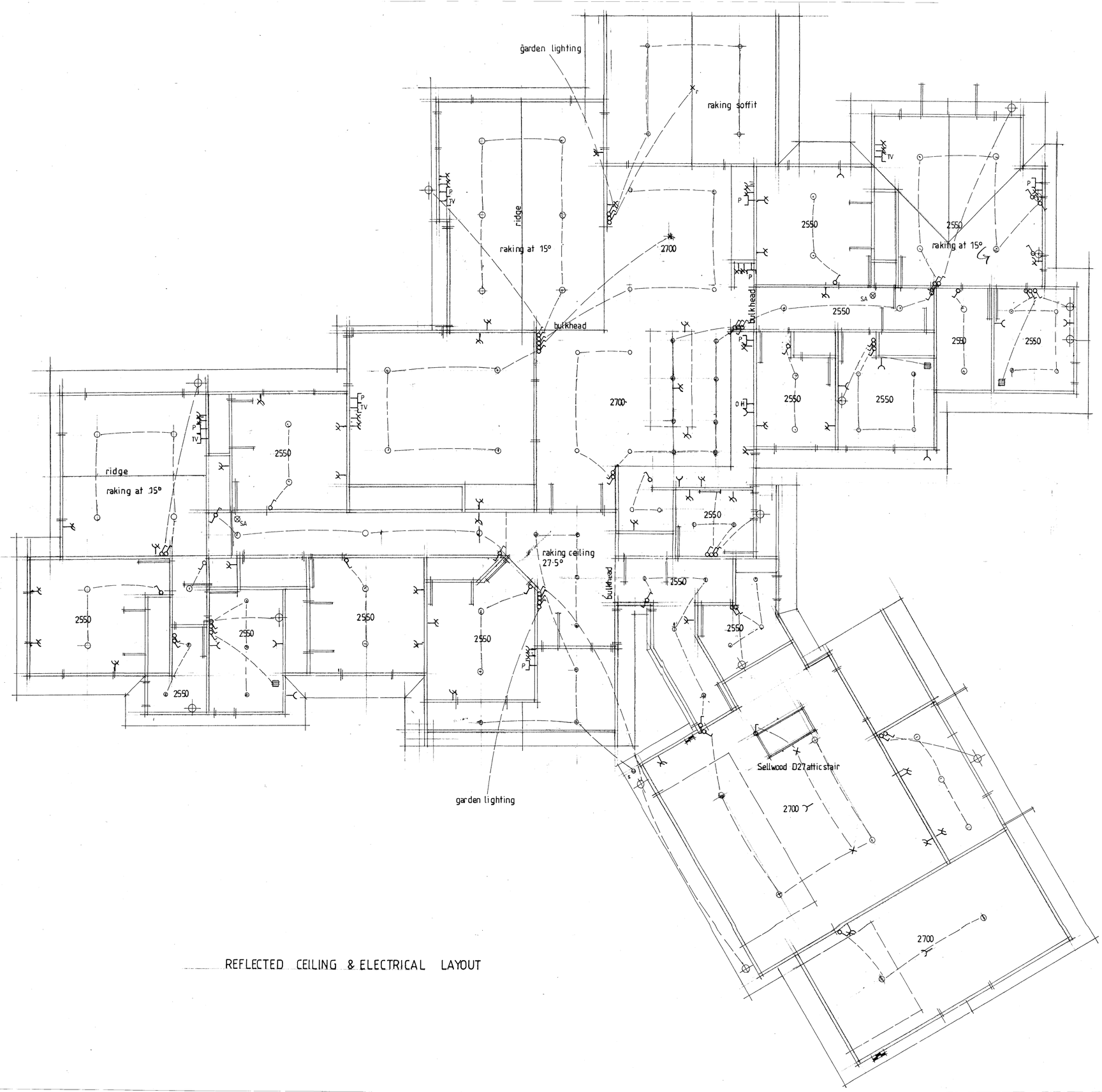


REFLECTED CEILING & ELECTRICAL LAYOUT

## ELECTRICAL LEGEND

- meter bd
- distribution bd
- switch
- power point
- downlight
- lv downlight
- batten holder
- wall light
- sensor
- rose
- hob/oven
- phone
- tv
- extract fan
- smoke alarm
- task lighting fluro
- 2 way switch
- double

#0037021

REVISION

IZBa ARCHITECTURE
house of design

1 Utuhina Road
Rotorua
phone/fax: (07) 346 3862
mobile: (021) 676 361

project:
YEOMAN RESIDENCE
LOT 6
PARKLAND ESTATES
PUKEHANGI ROAD

drawing:
REFLECTED CEILING & ELECTRICAL LAYOUT

scale: 1·50

9 9
sht rev

Document Set ID: 562620
Version: 1, Version Date: 12/03/2009